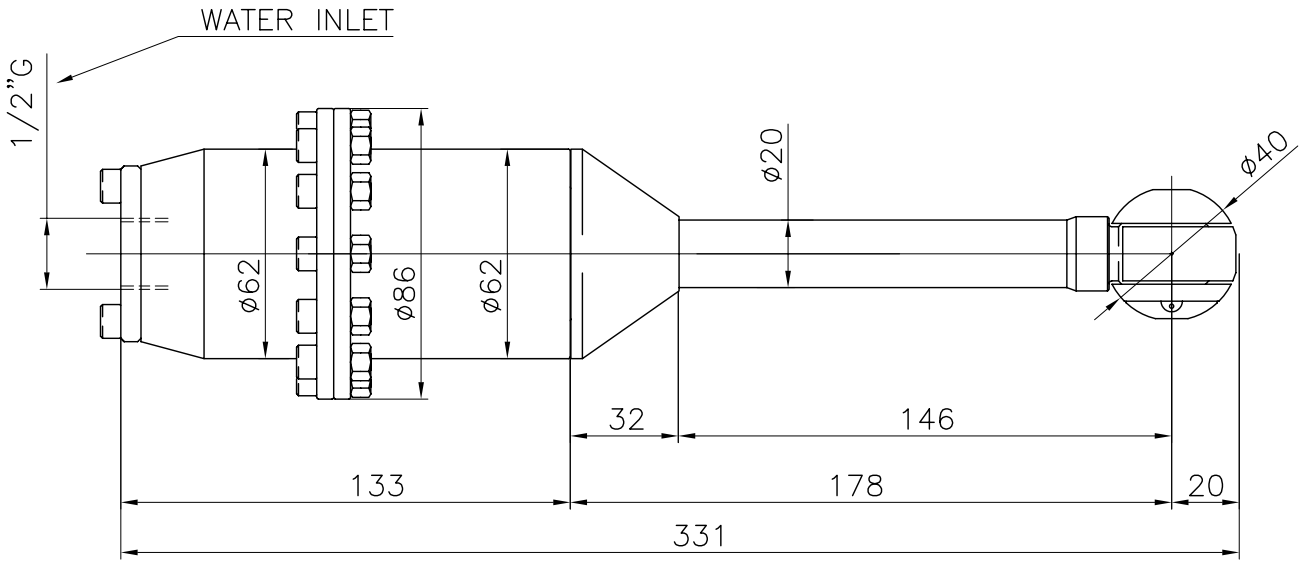

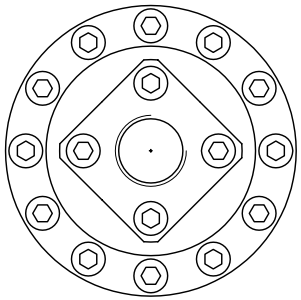

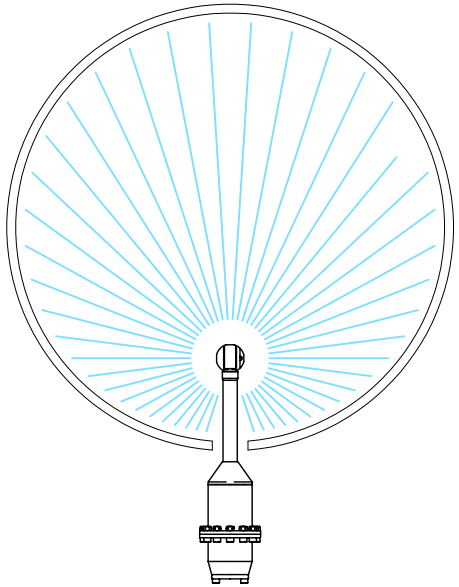

TECHNICAL DATA	
O.RING	EPDM
SLIPPER	PTFE+CARBON FIBRE
FILTER	NONE
NOZZLES POSITIONS	2 OR 4
NOZZLES TYPE	SPECIAL NOZZLE XB 030
MAX OPERATING FLOW	30 L/min – 8 USG/min
MAX OPERATING PRESSURE	150 bar – 2100 psi
MAX OPERATING TEMPERATURE	90 °C – 194°F
MATERIAL	INOX AISI 316
LUBRICANTS	NONE
CONICAL GEARS	FIXED Z=23 ROTATING Z=25
MODULE	1
COMPLETE CYCLE	25 ROTATIONS
COMPLETE CYCLE TIME	1.1 MIN.
ROTATION SPEED	24 RPM
WEIGHT	4.6 KG – 10 LBS

RUGOSITA' (UNI 4600)

GREZZO ~ = 6.3

SGROSS. ▽ = 3.2

FINITURA ▽▽ = 1.6

RETTIFICA ▽▽▽ = 0.8

MODIFICA	1	2	3	4	5
FOGLIO	XXXX				
DATA	XX.XX.XX				

TOLLERANZE GENERALI classe m UNI–EN 22768/1

0÷6	6÷30	30÷120	120÷400	400÷1000	1000÷2000
± 0.1	± 0.2	± 0.3	± 0.5	± 0.8	± 1.2

NOTE:

DESCRIZIONE: APPLICATION DRAWING
XB 031AAD_BQ 01

Bolandi
CLEANING HEADS
MONTECCHIO E. (RE) – ITALY

DISEGN.: CR | CONTR.: DM
DATA: 19.12.08 | MOD.
SCALA 1:2 | A4 | 0
CODICE: XB 031AAD_BQ 01